A22 Industrial Dust Collector (Longo Pack Version)

Operation and Maintenance Manual

TRELAWNY™
SURFACE PREPARATION TECHNOLOGY

www.trelawnyspt.co.uk

Tel: +44 (0)1926 883781
Fax: +44 (0)1926 450352

TRELAWNY™
SURFACE PREPARATION TECHNOLOGY

www.trelawnyspt.co.uk
Email: sales@trelawny.co.uk

DECLARATION OF CONFORMITY

We,

Trelawny SPT Limited of
Trelawny House, 13 Highdown Road, Sydenham Industrial Estate, Leamington Spa, Warwickshire, CV31 1XT, United Kingdom,

Declare that under our sole responsibility for supply/manufacture of the product

Name of product _____

Model, Serial Number _____

Year of production _____

to which this document relates is in conformity with the provisions of the following Directive(s), Normative Documents and their relevant Standards:

2006/42/EC	**MACHINERY DIRECTIVE**
2006/95/EC	**LOW VOLTAGE DIRECTIVE** **(Applicable only to products using electric power)**
EN ISO 11148-4:2012	**HAND HELD NON-ELECTRIC** **(Non-Rotary Percussive Tools)**

Date and place of issue,
24th June 2016
Leamington Spa, England.

CE

Rob Chapman,
Managing Director.

CZ	Prohlášení o přizpůsobení My, společnost Trelawny SPT Limited podajemy daňové přiznání, že výrobek a dodávka výrobku název výrobku Model, výrobní číslo Rok výroby Pro které se průkaz týkající, je přizpůsobení s zásoby od následující příkazov a jejich pohotovostní: 98/37/EC Příkaz soustrojí 73/23/EC Příkaz nízkého napětí (upotřebitelne jedině do výrobku použití elektrickej energie)	LT	ATITIKTIES DEKLARACIJA˙ Mes, Trelawny SPT Limite Prisiimdami visą atsakomybę, deklaruojame, kad tiekiamas / gaminamas produktas Produkto pavadinimas Modelis, serijos numeris Pagaminimo Kuriam taikoma ši deklaracija, atitinka šių direktyvų, norminių aktų ir su jais susijusių standartų reikalavimus: 98/37/EC Įrangos direktyva 73/23/EC Žemos įtampos direktyva (taikoma tik elektriniams įrengimams)
DE	Ubereinstimmungserklarung Wir, Trelawny SPT Limited erklaren, dass unter unserer alleinigen Verantwortung fur die Lieferung und Herstellung des Produktes Name des Produktes Model, Seriennummer Jahr der Herstellung auf welches sich dieses Dokument bezieht, stimmt mit den Vorgaben der folgenden Direktive, normativen Dokumente und deren jeweiligen Masstabe ein: 98/37/EC Maschinerieдirektive 73/23/EC Niederspannungsdirektive (nur zutreffend auf Produkte, die Strom benutzen)	MT	DIKJARAZZJONI TA KONFORMITA Aħna, Trelawny SPT Limited Niddikjaraw li aħna responsabbli kompletament għal provista / manifattura tal-prodott hawn imsemmi : Isem Il-Prodott Mudell, Serial number Sena ta 'produzzjoni Dan id-dokument magħmul għal prodott imsemmi hawn fuq, li huwa skond il-provizjonijiet imsemmija fid-dokumenti tal-klassi tax-xogħol : 98/37/EC Machinery Directive 73/23/EC Low Voltage Directive (tapplika biss għal prodotti li jaħdmu bl-eletriku)
DK	Erklæring om overensstemmelse Vi, Trelawny SPT Limited Erklærer hermed at under vores ene forhandling ansvar for vores forhandling/produktion af produktet Produkt navn Model, serie nummer Produktionsår For hvilket dette dokument referer, at det er i overensstemmelse med bestemmelser af følgende direktiver, normative dokumenter og deres relevante standart: 98/37/EC Machinery directive 73/23/EC Low voltage directive	NL	EENVORMIGHEIDSVERKLARING Wij, Trelawny SPT Limited Verklaren dat wij de volledige verantwoordelijkheid dragen voor het leveren/fabriceren van het volgende product: Naam van het product Type, Serienummer Productiejaar En verklaren dat het product waarnaar dit document verwijst eenvormig is met de voorzieningen van de volgende Richtlijn(en), Normatieve Documenten en hun relevante Standaarden: 98/37/CE MACHINERICHTLIJN 73/23/CE LAAGSPANNINGSRICHTLIJN (uitsluitend van toepassing bij producten die elektrische stroom gebruiken)
EE	TOOTE VASTAVUSE DEKLARATSIOON Meie, Trelawny SPT Limited Deklareerime,et vastutame järgmise varustuse/toote müügi eest Toote nimetus Mudel,Seeria number Aasta toodangu Antud dokument tõendab toote vastavust järgmistele direktiivi(de)le, normatiivaktidele ja nendega samaväärsetele standarditele: 98/37/EC MASINA DIREKTIIVID 73/23/EC MADALPINGE DIREKTIIVID (Kohandatakse vaid toodetele, mis kasutavad elektrivoolu)	PL	Deklaracja Zgodnosci My, Firma Trelawny SPT Limited, oświadczamy w naszej odpowiedzialności, ze produkcja i dostawa urządzenia Nazwa produkta Model, numer seryjny Rok produkcji do którego ten dokument należy, jest zgodne z klauzulami nastąpujacych zarządzen i ich istotnych standartów: 98/37/EC Zarządzenie mechaniczne 73/23/EC Zarządzenie niskiego napięcia elektrycznego (Zastosowanie tylko przy urządzeniach elektrycznoych)
ES	Declaración de Conformidad Nosotros, Trelawny SPT Limited Declaramos que bajo nuestra completa responsabilidad de la fabricación/suministro del producto Nombre del Producto Modelo, No de Serie Año de producción A quién este documento se refiere, está de acuerdo con lo relacionado en la Directriz, Normativa Documentada y sus relevantes standards: 98/37/EC Directorio de Maquinaria 73/23/EC Directorio de Bajo Voltaje (Aplicable solamente a productos que funcionen con electricidad)	PT	DECLARAÇÃO DE CONFORMIDADE CE A empresa TRELAWNY SPT LIMITED Declara, sob sua inteira responsabilidade, que o fornecimento/fabrico do seguinte produto: Designação do produto Modelo, Número de Série Ano de produção a que esta declaração se refere, está em conformidade com o preceituado nas Directivas e Normas Comunitárias abaixo indicadas: 98/37/EC DIRECTIVA DE MÁQUINAS 73/23/EC DIRECTIVA DE BAIXA VOLTAGEM (Aplicável apenas a produtos que utilizam energia eléctrica)
FI	ILMOITUSVAHVISTUS Me, Trelawny SPT Limited Vahvistamme tuotteiden toimittamisesta/valmistamisesta Tuotenimi Malli, sarjanumero Valmistusvuosi Tällä todistuksella vahvistamme säädökset seuraviin ohje/ohjesiin, Yleisiin papereihin ja niihin liittyvät vaatimukset: 98/37/EC KONEISTON OHJEET 73/23/EC PIENJÄNNITE OHJEET (tarvitaan ainoastaan tuotteille jotka käyttävät sähkovoimaa)	RU	СВИДЕТЕЛЬСТВО О СООТВЕТСТВИИ Мы, Trelawny SPT Limited Заявляем, что несем полную ответственность за поставку/производство нижеуказанной продукции Наименование изделия Модель, серийный номер Год выпуска на которую выдано настоящее Свидетельство, и которая соответствует положениям следующей(их) Директив(ы), нормативным документам и относящимся к ним стандартам: 98/37/EC ДИРЕКТИВА ПО МЕХАНИЗМАМ 73/23/EC ДИРЕКТИВА ПО НИЗКОВОЛЬТНОМУ ОБОРУДОВАНИЮ (распространяется только на изделия с электропитанием)
FR	DÉCLARATION DE CONFORMITÉ Nous, soussignés Trelawny SPT Limited déclarons que le produit sous-nommé Nom du produit Modèle et Numéro de Série Année de production et pour lequel nous prenons entière responsabilité pour sa fourniture et manufacture, est conforme aux clauses des directives suivantes, documents norminatifs et normes qui s'y appliquent: 98/37/EC DIRECTIVE POUR LA MACHINERIE 73/23/EC DIRECTIVE POUR BAS VOLTAGE (n'est applicable qu'aux produits utilisant l'énergie électrique)	SE	FÖRSÄKRAN OM ÖVERENSSTÄMMELSE VI, TRELAWNY SPT LIMITED FÖRKLARAR ATT VI MED ENSAMT ANSVAR ANSKAFFAT / TILLVERKAT PRODUKTEN PRODUKTNAMN MODELL och SERIE NUMMER Tillverkningsår TILL VILKEN DETTA DOKUMENT HÄNVISAR , ÄR I ÖVERENSSTÄMMELSE MED FÖLJANDE DIREKTIV , NORMATIVA DOKUMENT OCH DERAS RELEVANTA STANDARDER 98/37/EC MASKINDIREKTIV 73/23/EC LÅGSTRÖMSDIREKTIV (TILLÄMPLIG PÅ ELEKTRISK DRIVNA PRODUKTER)
GR	ΔΗΛΩΣΗ ΠΙΣΤΟΤΗΤΑΣ Η εταιρεια Trelawny SPT Limited Δηλωνει ότι έχει τη μοναδικη ευθυνη ως κατασκευαστρια / προμηθευτρια του παρακατω προιοντος περιγραφη προιοντος μοντελο, αριθμος σειρας έτος παραγωγής και στο οποιο αναφερεται αυτη η δηλωση, ειναι συμβατο με τις προδιαγραφες που οριζονται στις ακολουθες Κοινοτικες Οδηγιες Ελεγκτικες Διαταξεις κι αλλες σχετικες προδιαγραφες 98/37/EC ΟΔΗΓΙΑ ΠΕΡΙ ΜΗΧΑΝΗΜΑΤΩΝ 73/23/EC ΟΔΗΓΙΑ ΠΕΡΙ ΧΑΜΗΛΗΣ ΤΑΣΗΣ (αφορα μονον προιοντα που λειτουργουν με ηλεκτρικο ρευμα)	SI	IZJAVA O SKLADNOSTI Trelawny SPT Limited pod polno odgovornostjo izjavljamo, da so spodaj navedeni proizvodi, ki jih dobavljamo/proizvajamo: Ime proizvoda Model, serijska številka Leto proizvodnje na katere se ta dokument nanaša, proizvedeni v skladu z določili naslednjih direktiv, normativnih dokumentov in njihovih relevantnih standardov: 98/37/EC DIREKTIVA O STROJIH 73/23/EC DIREKTIVA O STROJIH Z NIZKO VOLTAŽO (nanaša se samo na proizvode na električni pogon)
HU	MEGFELELŐSÉGI NYILATKOZAT Mi, A "Trelawny SPT Limited" cég Felelösségünk tudatában kijelentjük, hogy mint a termék szállítója/ gyártója Termék neve Típus, Sorozatszáma Gyártási év amelyre jelen dokumentum vonatkozik, megfelel az alábbi Irányelv(ek), Irányadó Dokumentumok elöírásainak, és az azokat meghatározó szabványoknak: 98/37/EC GÉPÉSZETI IRÁNYELVEK 73/23/EC KISFESZÜLTSÉGÜ IRÁNYELVEK (Csak az elektromos meghajtású gépeknél)	TR	UYGUNLUK BEYANI Trelawny SPT Limited Aþaðýdaki, üretim ve tedarikinden tek baþýna sorumlu olduðu ürünün Ürün adý Model/Seri no Üretim yili bu belgenin ilgili olduðu aþaðýdaki yönetmeliklerin, norm belgelerinin ve ilgili standartlarýnýn kopullarýna uygun olduðunu beyan eder: 98/37/EC MAKÝNALAR YÖNETMELÝÐÝ 73/23/EC DÜÞÜK GERÝLÝM YÖNETMELÝÐÝ (Yalnýyz elektrikle çalýþan ürünlerde geçerlidir)
IT	DICHIARAZIONE DI CONFORMITA La Società Trelawny SPT Limited Dichiara, sotto la propria responsabilità, che la fornitura / produzione del prodotto Nome prodotto Modello, codice Anno di produzione a cui si riferisce tale documento è conforme alle seguenti Direttive, ai documenti della Normativa ed ai relativi standard: 98/37/EC DIRETTIVA SULLE APPARECCHIATURE 73/23/EC DIRETTIVA SUL BASSO VOLTAGGIO (applicabile esclusivamente per i prodotti che utilizzano energia elettrica)		

OPERATION

Foreword

Thank you for your purchase of the TRELAWNY Professional use A22 Industrial Vacuum Cleaner.

This manual contains the necessary maintenance information for you to ensure proper operation and care for this machine.

It is essential for you to read through this manual thoroughly.

In the unlikely event that you experience problems with your A22 Vacuum, please do not hesitate to contact your local Trelawny dealer or agent. We always welcome feedback and comments from our valued customers.

General Information

Before operating, performing maintenance or repairing the A22 Industrial Vacuum Cleaner this manual must be read and understood by the operator, if in any doubt, ask your supervisor before using this equipment.

Local safety regulations must be followed at all times. Failure to follow these instructions could result in damage to the A22 Vacuum and/or personal injury.

Trelawny SPT Limited disclaims all responsibility for damage to persons or objects arising as a consequence of incorrect handling of the machine, failure to inspect the machine for damage or other faults that may influence the operation prior to starting work, or failure to follow the safety regulations listed or applicable to the job site.
This machine is primarily designed for the containment of nuisance dust and dust collection.

A HEPA filtered vacuum system is available, which will contain 99.97% (DOP) of all air borne dust when removing toxic or contaminated products.

It can be used both indoors and outside in dry weather only.

This machine is not water proof.

Safety

The person in charge of safety shall be responsible for informing workers about the risks associated with vacuum cleaner operations.

Ensure training is given to operators in the correct use and maintenance of the vacuum in order to protect themselves and others from hazards.

Failure to observe basic safety regulations and precautions could cause accidents during the vacuum cleaners operation, maintenance or repair.

Trelawny shall under no circumstances be deemed liable for accidents or damage caused by use of the vacuum cleaner by personnel not properly trained or who use it in an improper manner.

The safety precautions and warning notices are indicated in this manual and on the product

Unless these hazard messages are heeded, the operator could become involved in accidents with serious consequences for him/herself and others.

Trelawny cannot foresee all possible circumstances capable of representing a potential hazard, therefore the warnings in this manual and on the product should not be deemed exhaustive.

Only ever use original Trelawny spare parts

Trelawny declines all liability in the event of non-original spare parts being used.

In the event of tools, procedures or work methods used that are not explicitly recommended by Trelawny, ensure no hazards exist for the operators and others.

Further advice is available from our Technical Department.

The employer must inform and train the user according to the provisions of applicable local laws.

Before using the machine, prepare and train yourself by reading this manual carefully.

Use of the machine by untrained and unauthorised persons is forbidden.

Do not use the machine to vacuum toxic substances unless it has been equipped with the special filters required for the specific type of dust.

Such filters must be explicitly requested by you.

IMPORTANT:
Do not vacuum flammable materials or substances or which could cause explosions (fuels, solvents, etc.). To vacuum such materials, the machine must be built with anti-explosion motor and electric system and this must be requested by you explicitly.

Do not vacuum corrosive substances unless the machine is equipped with containers suitable for this purpose (Stainless-steel AISI 304).

Use of the machine without the supplied filters is not recommended.

If the machine is used to vacuum toxic/harmful substances, the container must be emptied and the filters cleaned using adequate **P**ersonal **P**rotection **E**quipment.

This machines motor casing contains electrical components which must not be dismantled by the user.

When using the machine, be aware of other people around you.

Use the machine cautiously on slopes and ramps. Do not change direction on gradients.

Make sure the parked machine remains stable by operating the braked wheel.

Do not open the vacuum container with the motor running.

OPERATION

Pre-start check

Check all bolts and screws for tightness. Ensure that all fittings are secure.

This specific vacuum cleaner model has been designed, built and protected for vacuuming dusts and solid materials only. SEE BELOW

To ensure the correct operation of the vacuum cleaner, this must be positioned protected against atmospheric agents (rain, hail, snow, fog, dusts in suspension, etc.) with an environmental running temperature between 5°C and 45°C and relative humidity not above 70%.
The work environment must be clean, well-enough lit and devoid of an explosive atmosphere.
The vacuum cleaner must not be used in environments containing substances in the form of liquids that could vaporise at room temperature and flammable dusts and gas.
All cables should be fully uncoiled and never left wrapped around cable reels or tied in loops.

OPTIONAL FILTERS
Besides the optional HEPA filter (303.5397), and depending on the dust to be vacuumed, the following filters and accessories are also available:

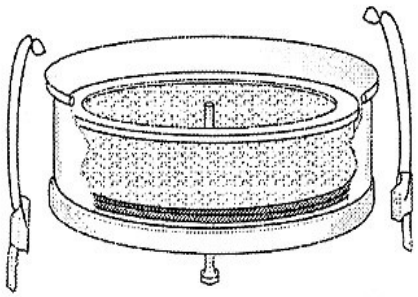

The HEPA filter permits the trapping of fine dust particles which have not been contained by the primary polyester filter.
If the vacuum cleaner features this specific filter, its filtering capacity will have to be periodically checked.

To change the filter, switch off the vacuum cleaner and remove the plug from the power socket, release and remove the upper cap and then loosen nut (A) in picture below.

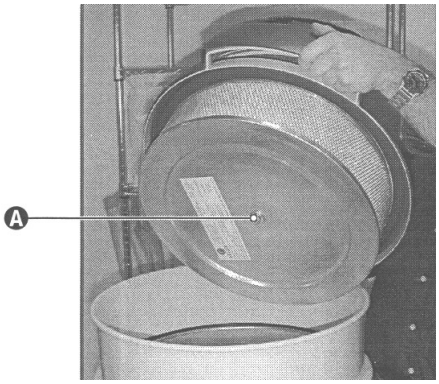

Remove the absolute filter, seal it in a plastic bag and dispose of according to applicable local laws for the type of dust recovered.

Make sure the maintenance engineer has carefully read the instructions contained in this manual and knows how the vacuum cleaner works.

Before carrying out a maintenance job, the maintenance engineer must:

Disconnect the plug from the power socket.

Work done on motors or other electrical component parts must only be performed by a specifically trained electrician.

Always use tools that are in perfect condition and specifically made for the operation to be done. The use of unsuitable tools or tools not in good condition could cause serious damage.

Maintenance checks

For efficient vacuum cleaner operation, a number of checks are best made periodically:

Check to see whether the filter is worn or has become too permeable.

Make sure the gaskets of the motor head base, the filter holder ring and of the container are sealing correctly.

The electrical parts (plugs, switches, cables, etc.) must not be faulty.

The screws and fastenings must always be secure.

Make sure the container is not overfull.

Check the integrity of the flexible vacuum hose and accessories.

If the flexible hose is perforated, the power of the cleaner will be reduced and dust may leak into the environment.

When contacting Trelawny SPT Ltd or their agents, always quote the details shown on the vacuum cleaner serial plate.

OPERATION

Starting
Description of controls

1) Locking Catch
2) Motor Head
3) Plastic Cap
4) Vacuum Inlet
5) Longopac
6) Braked Castor Wheel
7) Connector release
8) Push Handle
9) Toggle Clamp
10) Cable and Tool Storage

110v Motor
Take particular care when using 110v machines, ensure that the 230v electrical supply is earthed and that breakers and fuses are correct for the loading.
The 110v motor requires the minimum of a 16 amp transformer centre tap power supply.
To avoid voltage drop, always use the shortest possible length of extension cable.
Maximum length of cable 30 meters.

Fit the accessory required for the type of vacuuming operation on the opposite end of the hose.

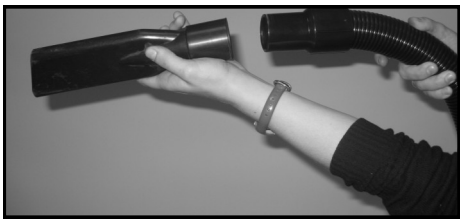

Note: Standard accessories that are included with this vacuum system are a flexible hose, floor squeegee, floor brush, PVC lance, PVC brush, PVC connection, PVC extension, a double bend and a flexible hose connection.
All other accessories must be specified and ordered separately.

(11 & 14) STOP/START Switch.

(12) POWER ON - Green light.

(13) FILTER CLOGGED - Orange light.

Fit the supplied pipe in the connector.

Make sure the power supply corresponds to the voltage and frequency indicated on the vacuum cleaner plate.

IMPORTANT: Do not plug in the power socket with wet hands
In the event of an extension being used, make sure this is in perfect condition, in compliance with EC standards and with cable cross section suitable for the power input of the vacuum cleaner.

Operation
Pull red Locking Catch on right hand side of vacuum cleaner to unlock the sliding system. (1)
Lock the front castor wheel (6).
Grip one end of the flexible hose complete with selected accessory.
Press either switch START to the 'on' position. (11 and/or 14)
Single motor or twin motor power.
To stop the vacuum cleaner, move the switches to the 'off' position.

Caution:
Before switching the vacuum cleaner back on, ensure the motors have come to a complete halt.
After finishing work, disconnect the vacuum cleaner from the power supply.
For greater convenience, the most frequently used accessories can be placed in the special accessory basket on top of the motor unit. (10)

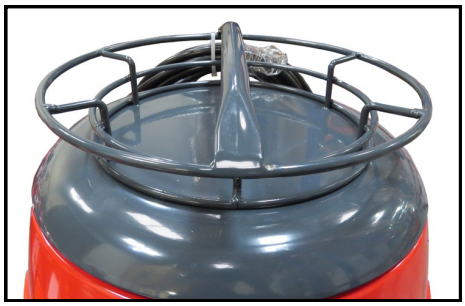

OPERATION & MAINTENANCE

Using the filter cleaning system.

If the vacuum cleaner becomes inefficient, the filter will have to be cleaned by means of the special reverse pulse flap on the front of the machine.

Block off the vacuum take off using the Plastic Cap provided (3). Start the motors and allow a vacuum to be produced, open the flap quickly and close the flap on the front of the vacuum several times, the inrush of air produces the reverse pulse action.

If the orange light indicator is still on, repeat the filter cleaning process.

If after this second cleaning process the orange light is still on and the vacuum cleaner is still inefficient, replace all filters.

The filter cleaning system is best operated every time before use and after prolonged operation.

Once the cleaning process has finished, remove the Plastic Cap (3) from the suction inlet and connect the accessories to continue the vacuum process.

Dust containment bag

This should be emptied when the vacuumed material has reached 3/4 of its maximum capacity.

Procedure for revealing a new section of the dust containment bag.

Stop the vacuum motors by pressing the relevant STOP switches and disconnect from the power socket.

While performing this operation it is best to wear a dust protection mask.

Use two ties at two points 3-5cm apart just below the filter chamber.

Cut the bag between the two ties.

Pull down a length of new bag from the chamber until it reaches the support plate.

Empty the contents of the bag into a special waste disposal container in accordance with laws applicable in the country where the vacuum cleaner is used.

Remove plastic cap and replace vacuum hose.

Maintenance

This section describes the control and special maintenance operations crucial for keeping the vacuum cleaner in perfect working condition. In the case of major repairs, it is best to contact an authorised dealer,

Replacing the filters

To replace the filters, proceed as follows:

Turn off the vacuum cleaner by pressing the motor **STOP** switches. Disconnect the vacuum cleaner plug from the power socket.

Ensure front braked castor wheel is locked .

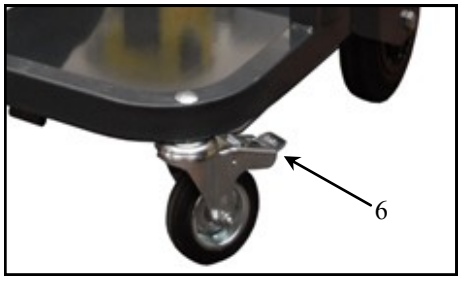

Release the two toggle clamps that hold the motor head in place.

Lift the motor head and rest this on a flat surface being careful not to damage the power cable.

Remove the Conical Cartridge Filter and replace as necessary.

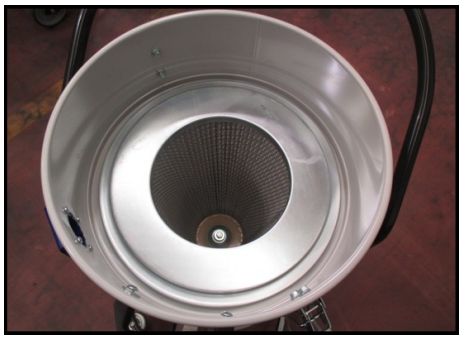

Remove the Conical Cartridge Filter and replace as necessary.

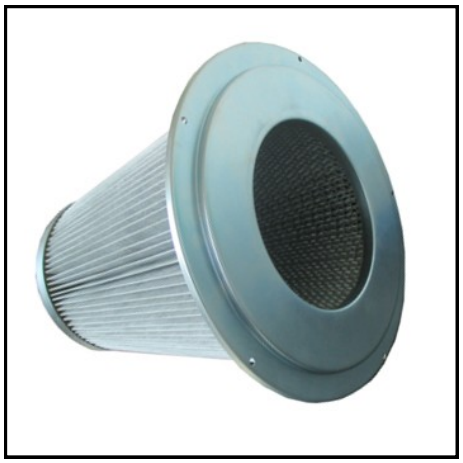

Other filters are available which can give a long life than the standard filter. (See recommended spares).

Important:

All material trapped and contained within the filter must be disposed of according to local legislation.

MAINTENANCE

LONGOPAC REPLACEMENT
Once the length of Longopac is exhausted replace with a new system as follows:

There are two retaining levers either side of the Longopac Support Ring.

Pull down and rotate these inwards to disconnect it from the Hopper container.

Remove the remnants from the Support Ring and fit a replacement system on to the Support Ring tray as shown in the diagram opposite.

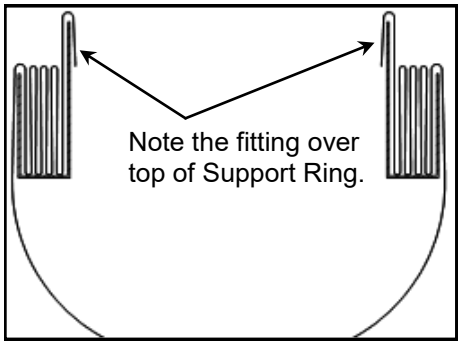

Pull a length of Longopac over the top of the Support Ring as shown without tying it.

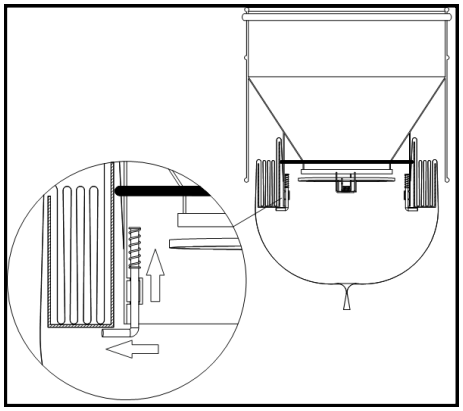

Lift Support Ring until level of the Hopper container and rotate the retaining levers outwards to fasten the Ring, then finally tie off the lower section of Longopac.

RECOMMENDED SPARES

PART NUMBER	DESCRIPTION
303.5275	"M" Cat Conical Cartridge Filter
303.5265	"M" Cat Anti-Static Cartridge Filter
303.5280	PTFE Conical Cartridge Filter

TECHNICAL SPECIFICATIONS

	A22	
Voltage	Volts	110v or 230v 50/60Hz
Power	Watts	2300
IP		
Vacuum rate	Mm/H2O	2500
Max. Air flow	M^3/h	360
Noise level	dB(A)	75
Filter	Cartridge Filter (Cat M)	
Filtering surface (Primary)	cm^2	30,000
Filtering surface (HEPA)	cm^2	190.00
Capacity	Lt.	20
Vacuum inlet	Ø	50
Dimensions	cm.	53 x 56
Height	cm.	130
Weight	Kg	35

FAULT FINDING

FAULT	CAUSE	ACTION
The cleaner fails to start.	No power.	Check the power mains supply. Check the integrity of the plug and power cable. Check transformer rest button.
	Indicator off and plug fitted, fuses burnt out.	Replace the fuses.
	Indicator on, plug fitted, switches working, worn motor brushes	Replace the brushes.
Dust is leaking out	Perforated vacuum pipe.	Replace the pipe.
	Perforated filter.	Replace the filter.
	Filter unsuitable for type of job.	Fit a suitable filter for the type of material to be vacuumed.
The vacuum cleaner does not work as it should.	Pipe perforated or blocked.	Check the pipe and, if necessary replace.
	Container full	Empty container.
	Filter blocked.	Replace filter.
	Seals worn.	Clean the filter and if necessary change it.
	Air leak.	Check for any air leaks out of closing fasteners, tightening screws, container or filter chamber.
If problem has not been cured by any of the above actions, contact your local Trelawny SPT dealership for assistance.		

Machine storage

Remove the filter and clean it, empty the container and store the vacuum cleaner in a place protected against condensation and at a temperature between 0°C and 40°C.

Cover with a nylon sheet to prevent accumulation of dust.

Scrapping

In case of scrapping, all the component parts of the vacuum cleaner will have to be disposed of through suitable channels in accordance with applicable legislation.

Before scrapping, all plastic and rubber parts will have to be separated from the electrical material.

Most parts made from plastic, aluminium, copper or steel are suitable for recycling.

EXPLODED VIEW - MACHINE BODY

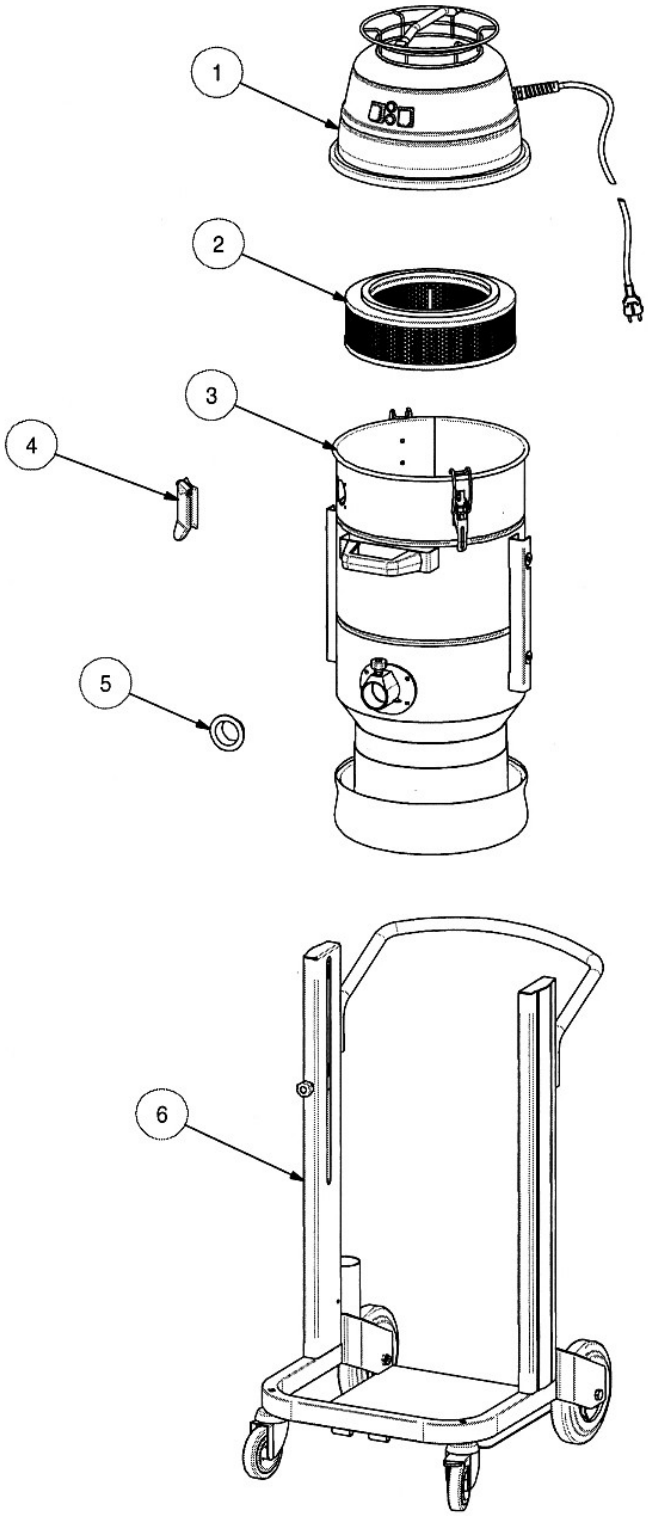

ITEM NUMBER	PART NUMBER	DESCRIPTION
1	303.5372	110v Motor Head Assembly
	303.5370	230v Motor Head Assembly
2	303.5397	Dust HEPA Filter
3	----	Chamber Kit
4	303.5592	50mm dia Flap
5	303.5395	Dust Cap
6	----	Machine Body Kit

EXPLODED VIEW - ELECTRIC MOTOR

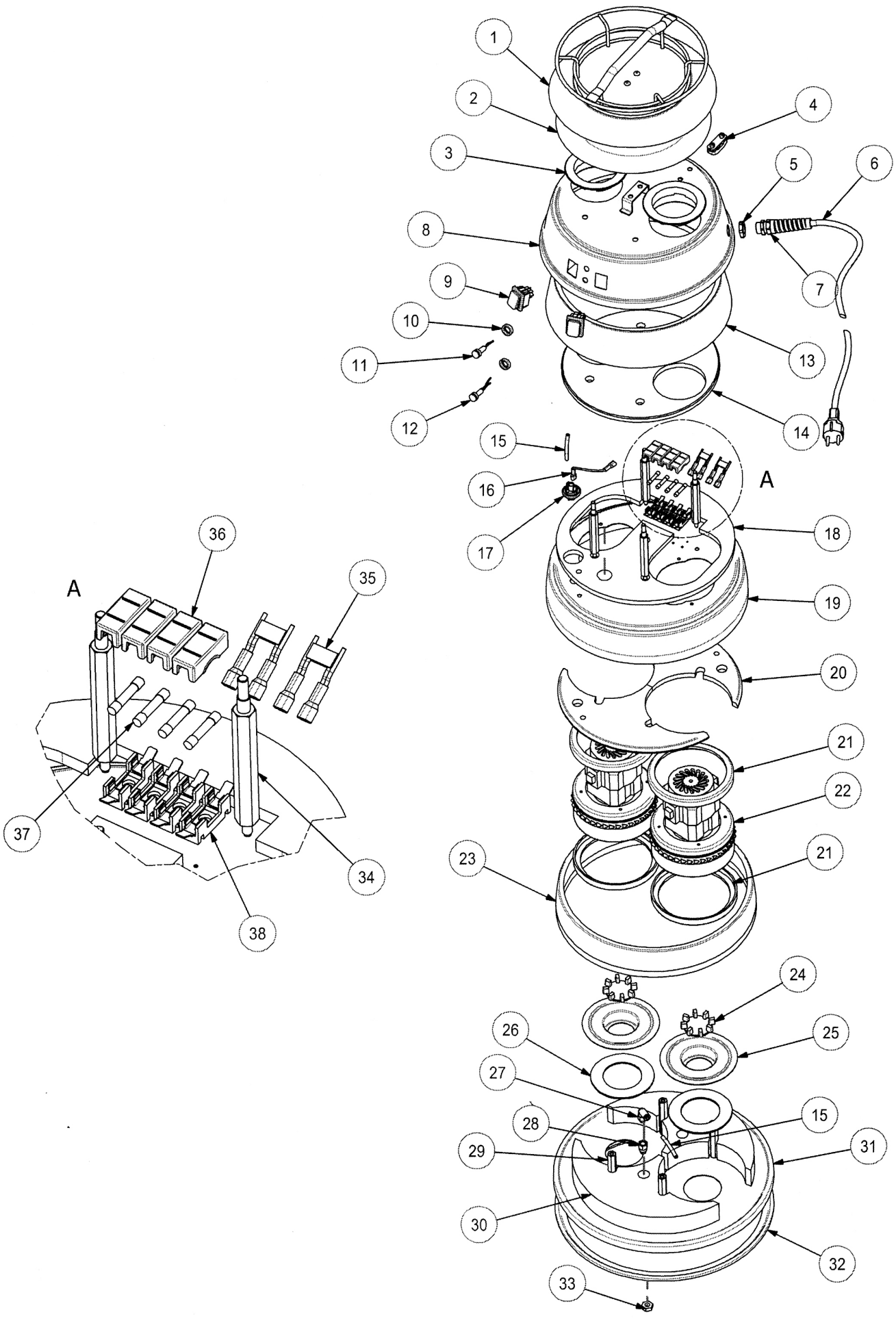

PARTS LIST - ELECTRIC MOTOR

ITEM No	PART NUMBER	DESCRIPTION
1	303.5100	Cover with Cable Support
2	303.5290	Cover Noise Supressing Material
3	303.5535	Cooling Ring (2 x required)
4	303.5180	Cable Clamp
5	303.5195	Cable Retaining Nut
6	303.5225	Power Supply Cable
7	303.5135	Black Cable Fastener
8	303.5117	Cover
9	303.5190	Red Light Switch (2 x required)
10	303.5245	Chrome Retaining Nut (2 x required)
11	303.5170	Yellow Light
12	303.5165	Green Light
13	303.5330	Side Cover Noise Suppressing Material
14	303.5315	Cover Noise Suppressing
15	303.5215	Nylon Pipe
16	303.5260	Black Cable
17	303.5175	Pressure Sensor
18	303.5335	Motor Fastener Suppressing Material
19	303.5115	Motor Mounting Plate
20	303.5320	Motor Fastener Noise Suppression Material (2 x required)
21	303.5300	Gasket (4 x required)
22	303.5285	230v 50/60Hz 1150watt Motor (2 x required)
	303.5288	115v 50/60Hz 1000watt Motor (2 x required)
23	303.5340	Motor Fastener Side Cover Noise Suppressing Material (2 x required)
24	303.5520	Bottom Plate Valve (2 x required)
25	303.5525	Motor Bottom Plate (Galvanized) (2 x required)
26	303.5350	By-Pass Motor Bottom Plate Gasket
27	303.5160	Swivel Elbow (Push-in fitting)
28	303.5580	M/F Extension
29	303.5515	Single Phase Motor Head Spacer (4 x required)
30	303.5325	Base Plate Noise Suppression Material (2 x required)
31	303.5110	Vacuum Base Plate
32	303.5310	Base Plate Gasket
33	303.5400	17mm Hexagonal Nut
34	303.5550	Motor Head Spacer (Cover) (4 x required)
35	303.5205	Single Phase 2 x Motors Head Wiring Kit
36	303.5150	Fuse Cover (4 x required)
37	303.5145	10amp Fuse (4 x required)
38	303.5230	Fuse Holder (4 x required)

This tool has been designed and produced in accordance with the following directives:

- ***2006/42/CE Machine directive***
- ***2004/108/CE Electromagnetic compatibility directive***
- ***2006/95/CE Low-voltage directive***

If your company has any problem with our products or would like to discuss the possibility of an improvement being made to them, then please do not hesitate to contact us. Your comments are both important and appreciated.

All rights reserved. Any unauthorised use or copying of the contents or part thereof is prohibited.
This applies to trademarks, model denominations, part numbers and drawings.
Use only genuine Trelawny spares.
The use of non-Trelawny spare parts invalidates the warranty.

EXPLODED VIEW - FILTER

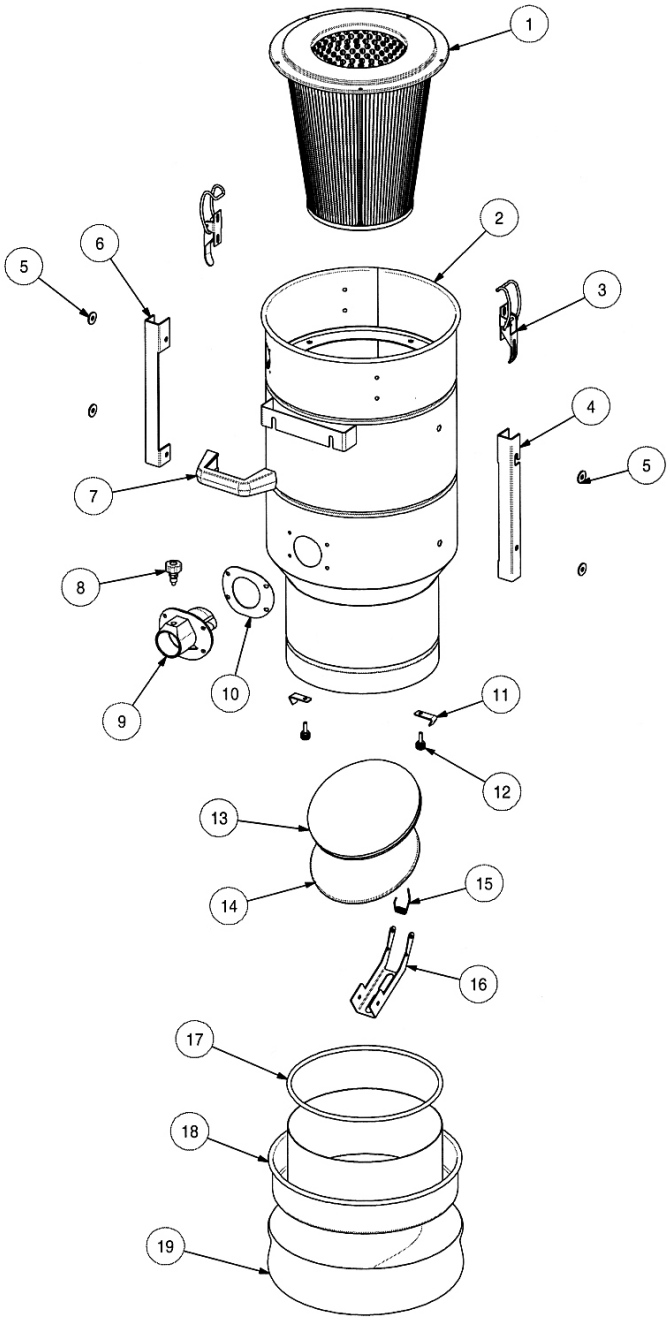

ITEM No	PART NUMBER	DESCRIPTION
1	303.5275	“M” Cat Conical Cartridge Filter
2	303.5634	Hopper
3	303.5490	Toggle Clamp (2 x required)
4	303.5607	Left Mounting
5	303.5585	Nylon Washer
6	303.5606	Right Mounting
7	303.4588	Handle
8	303.5505	Double Bend Pawl
9	303.5570	Inlet
10	303.5345	Inlet Gasket
11	303.5605	Longopac Container Hanger
12	303.5602	Knob
13	303.5355	Flap Gasket
14	303.5604	Flap
15	303.5584	Spring
16	303.5603	Flap Arm
17	303.5347	O’Ring
18	303.5583	Container
19	303.5770	4 x 20mtre Longopac

EXPLODED VIEW - FRAME

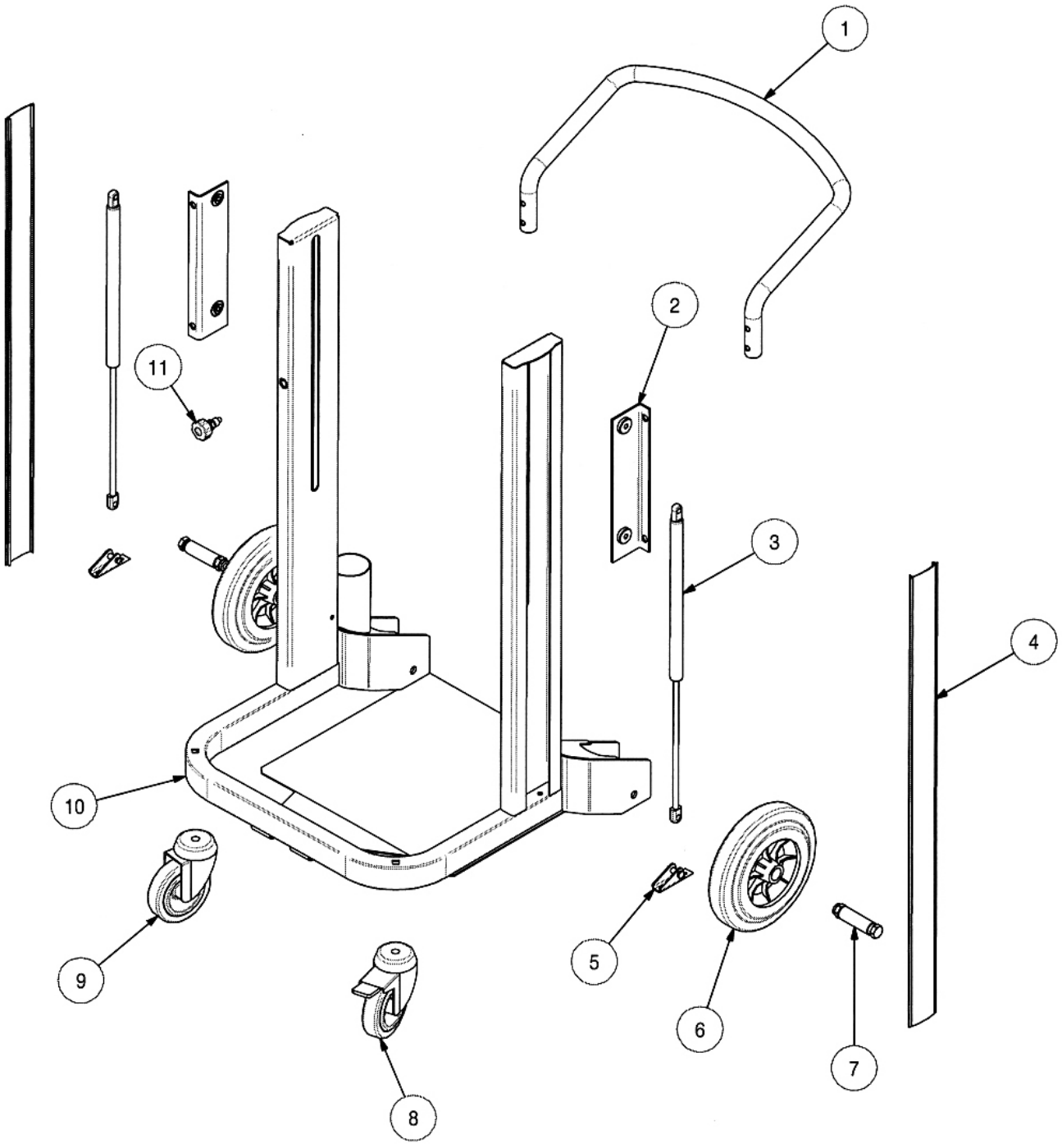

ITEM No	PART NUMBER	DESCRIPTION
1	303.5510	Push Handle
2	303.5601	Sliding Bracket
3	303.5250	Gas Spring
4	303.5609	Column Cover
5	303.5608	Mounting Braket
6	303.5435	Back Wheel
7	303.5457	Wheel Axle Kit
8	303.5455	Castor Wheel with Brake
9	303.5453	Castor Wheel
10	303.5630	Trolley
11	303.5505	Double Bend Pawl

NOTES

Trelawny SPT Ltd
13 Highdown Road, Sydenham Industrial Estate, Leamington Spa,
Warwickshire, CV31 1XT, United Kingdom
Telephone: +44 (0)1926 883781 - Fax: +44 (0)1926 450352
Email: sales@trelawny.co.uk

© TSPT UK 2017 Part No: 735.6022 Issued: 5.4.17

TRELAWNY™
SURFACE PREPARATION TECHNOLOGY

www.trelawnyspt.co.uk